WY-100V

NAKAMURA-TOME
PRECISION INDUSTRY CO.,LTD.

Both Turrets Equipped with Y-axis Two-spindle Two-turret Multitasking Machine

Faster than the fastest

Innovative Technology
~Creating new values~

WY-100V

The first of the "V series" multitasking machines, with speed as the design concept behind it.
Y-axis on the upper/lower turret and opposed twin spindles are standard equipment.
Enhanced processing capabilities and simultaneous left/right and upper/lower machining reinforce speedy production.
Furthermore, we have made software improvements to reduce idle time. It strives to be faster than the fastest that customers have ever experienced.

S×2 Twin Spindle	M×2 Milling Motor	B R-spindle
C×2 C-axes	Y×2 Y-axes	T×2 Double Turrets

30% Reduction in Cycle Time

Starting with the implementation of "ChronoCut" to reduce processing idle time, numerous new technologies have been incorporated to enhance production speed.

Hydraulic valve component (sample)

Material	S45C
Material Size	φ51mm×L75mm

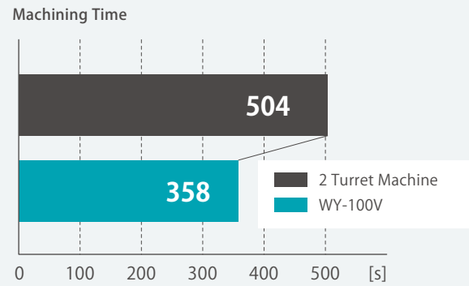

ChronoCut

A unique function by Nakamura-Tome designed to reduce idle time. This new software minimizes idle time during manufacturing without compromising accuracy, even without any changes to the cutting conditions.

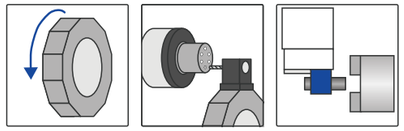

- High-speed indexing
- High-speed spindle synchronization
- Execution of multiple M-codes within the same block
- High-speed rigid tapping
- Reduction of PC-G unloading time, etc.

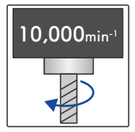

UP Machining conditions

By improving the machining capabilities of the milling speed, torque, and more, the machine achieves high performance under demanding conditions.

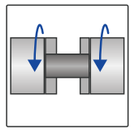

UP Acceleration / Deceleration

The acceleration and deceleration during starting and stopping have been improved, enabling quick attainment to the maximum speed.

Cycle Times are Faster Thanks to Simultaneous Machining with the L/R Spindles and Upper/Lower Turrets.

■ L-spindle

Standard

Bar capacity	φ42mm
Spindle speed	6,000min^{-1}
Spindle motor	11/7.5kW

Option

Bar capacity	φ51mm
Spindle speed	6,000min^{-1}

Option	Option
Spindle motor 11/7.5kW	Spindle motor 15/11kW

Option

Bar capacity	φ65mm
Spindle speed	5,000min^{-1}

Option	Option
Spindle motor 11/7.5kW	Spindle motor 15/11kW

■ Upper turret

Standard

Milling speed	6,000min^{-1}
Milling motor	7.1/2.2kW

Option

Milling speed	10,000min^{-1}
Milling motor	7.5/2.2kW

Dodecagonal drum turret

Y-axis slide travel
±42mm

Number of milling stations / Number of indexing positions
12 / 24

15-station turret

Y-axis slide travel
±31mm

Number of milling stations / Number of indexing positions
15 / 15

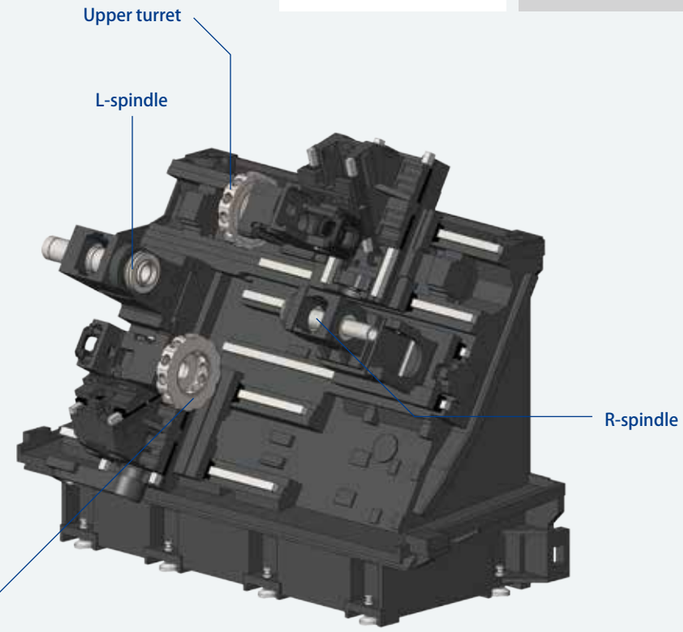

■ Lower turret

Standard

Milling speed	6,000min^{-1}
Milling motor	7.1/2.2kW

Option

Milling speed	10,000min^{-1}
Milling motor	7.5/2.2kW

Dodecagonal drum turret

Y-axis slide travel
±32.5mm

Number of milling stations / Number of indexing positions
12 / 24

15-station turret

Y-axis slide travel
±31mm

Number of milling stations / Number of indexing positions
15 / 15

Y-axis and Milling are standard.

■ R-spindle

Standard

Bar capacity	φ42mm
Spindle speed	6,000min^{-1}
Spindle motor	11/7.5kW

Option

Bar capacity	φ51mm
Spindle speed	6,000min^{-1}

Option	Option
Spindle motor 11/7.5kW	Spindle motor 15/11kW

GR-203 High-Speed(op.)

The entire process from loading the blank material, to unloading a finished part, can be automated.

* The image is of NTY^3-100.

Compact Loader(op.)

The entire process from loading the blank material, to unloading a finished part, can be automated.

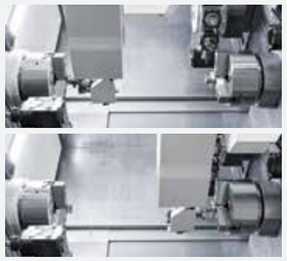

Parts catcher type G(op.)

Unloading a finished part can be automated.

NT SmartX
19 inch touch screen

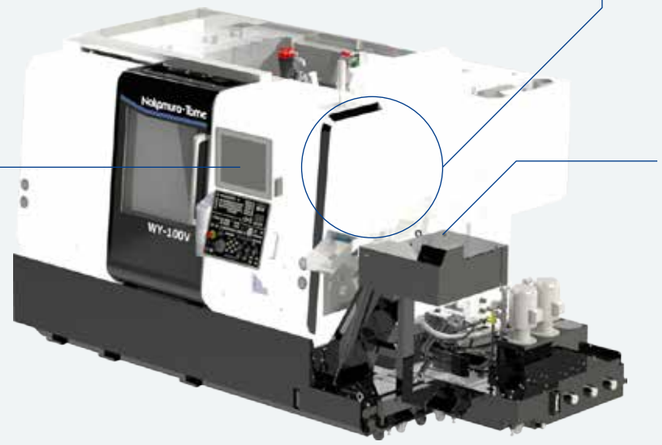

Chip conveyor(op.)

The discharge position can be selected from the following three options.
- Side
- Right side & Rear
- Left side & Rear

Turning

■ Balance cutting

■ Individual O.D. machining

■ Individual I.D. machining

Milling

■ Simultaneous dual milling

■ Deep drilling

■ Individual milling on the left and right spindles

■ Simultaneous Y-axis milling with upper and lower tools

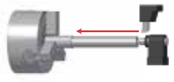
■ O.D. cutting with Center support

■ Increase work rigidity by PULL-Tension for Weak parts

Eco Friendly

Addition of ECO mode functions to NT SmartX
- Monitor OFF-TIMER <min>
- Machine Light OFF-TIMER <min>
- Servo Power Supply OFF-TIMER <min>
- Motor acc./dec. output limitation <%>

Improvement of the power control system
- The fan motor stops except during auto operation

- Grease lubrication for all axes
- Inverter-controlled hydraulic unit
- Dry brake
- Regenerative energy

Travel Range

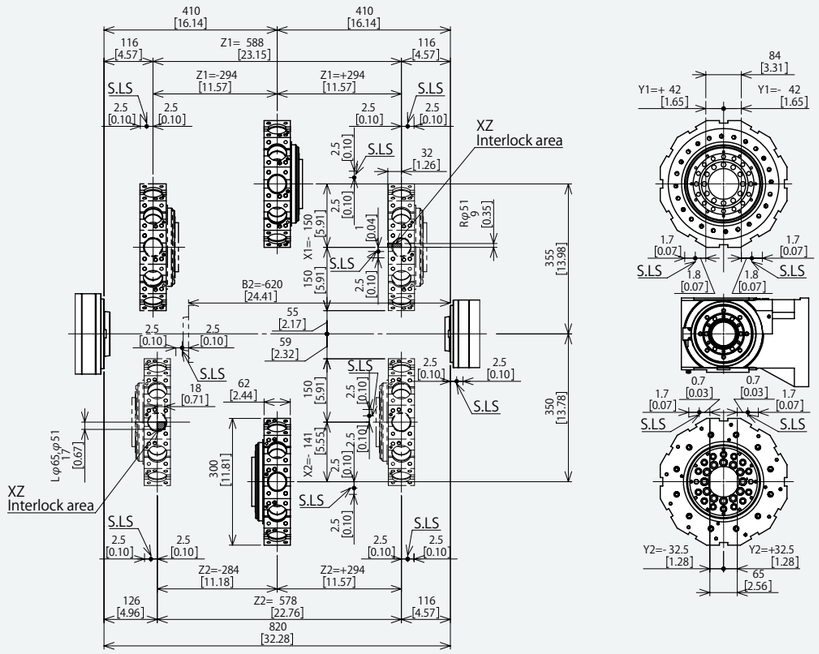

mm[inch]

Machine Dimensions

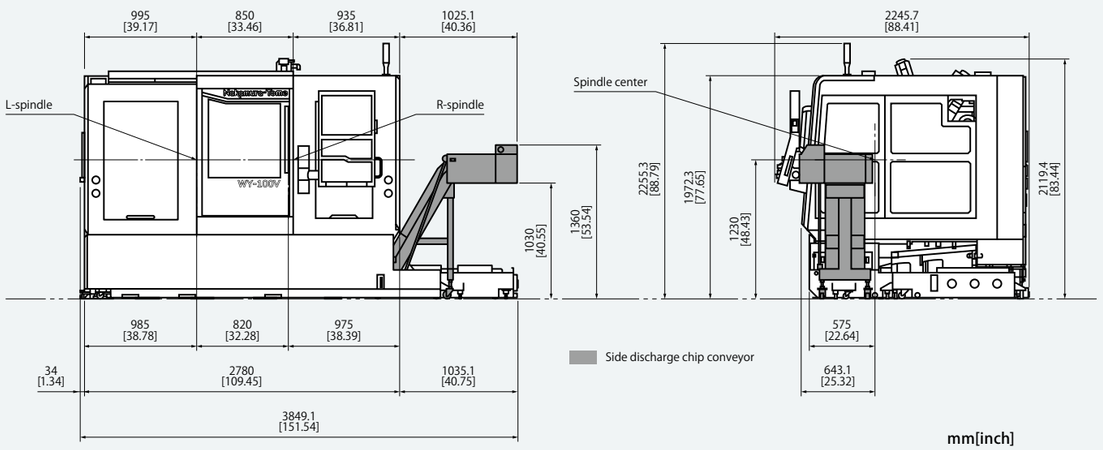

mm[inch]

■ Capacity

		φ42	φ51(op.)	φ65(op.)
Max. turning diameter	12st	200mm		
	15st(op.)	190mm		
Distance between spindles		max.820mm / min.200mm		
Max. turning length		588mm		
Bar capacity		φ42mm	φ51mm	φ65mm
Chuck size		6"		

■ Axis travel

X1/X2 axis slide travel	12st	150mm / 141mm
	15st(op.)	145mm / 130mm
Z1/Z2 axis slide travel	12st	588mm / 578mm
	15st(op.)	588mm / 560mm
Y1/Y2 axis slide travel	12st	±42mm / ±32.5mm
	15st(op.)	±31mm / ±31mm
B2-axis slide travel		620mm

■ Rapid feed

X-axis rapid feed rate	20m/min
Z-axis rapid feed rate	40m/min
Y-axis rapid feed rate	8m/min
B2-axis rapid feed rate	40m/min

■ L-spindle

Spindle speed	6,000min^{-1}	6,000min^{-1}	5,000min^{-1}
Spindle speed range	Stepless	Stepless	Stepless
Spindle nose	A2-5	A2-5	A2-6
Hole through spindle	56mm	63mm	80mm
I.D. of front bearing	80mm	90mm	110mm
Hole through draw tube	43mm	52mm	66mm

■ R-spindle

Spindle speed	6,000min^{-1}	6,000min^{-1}	-
Spindle speed range	Stepless	Stepless	-
Spindle nose	A2-5	A2-5	-
Hole through spindle	56mm	63mm	-
I.D. of front bearing	80mm	90mm	-
Hole through draw tube	43mm	52mm	-

■ C-axis

Least input increment	0.001°
Least command increment	0.001°
Rapid speed	600min^{-1}
Cutting feed rate	1-4,800° /min
C-axis clamp	Disk clamp
C-axis connecting time	1.5s

*1 The maximum gripping diameter varies depending on the collet manufacturer.

■ Upper/Lower turret

		φ42	φ51(op.)	φ65(op.)
Type of turret head	12st	Dodecagonal drum turret		
	15st(op.)	15-station turret		
Number of indexing positions	12st	24		
	15st(op.)	15		
Tool size (square shank)		□20mm		
Tool size (round shank)		φ25mm		

■ Milling

Rotary system		Individual rotation
Milling spindle speed	12st	6,000min^{-1} / 10,000min^{-1} (op.)
	15st(op.)	6,000min^{-1}
Spindle speed range		Stepless
Number of milling stations	12st	12
	15st(op.)	15
Holder type and Tool size		Straight holder φ1mm -φ14mm *1
		Crossholder φ1mm -φ14mm *1

■ Drive motor

L-spindle		11/7.5kW	11/7.5kW / 15/11kW(op.)
R-spindle		11/7.5kW	11/7.5kW / 15/11kW(op.)
Milling	6,000min^{-1}	7.1/2.2kW	
	10,000min^{-1} (op.)	7.5/2.2kW	

■ General

Height	2,255.3mm
Max. height of movable part	2,119.4mm
Floor space (W × D)	3,849.1mm ×2,245.7mm
Machine weight (incl. control)	9,500kg (Standard)

■ Power supply

Power supply	35.6kVA (L-spindle 11/7.5kW, R-spindle 11/7.5kW)
	38.7kVA (L-spindle 15/11kW, R-spindle 11/7.5kW)
	41.1kVA (L-spindle 15/11kW, R-spindle 15/11kW)

● Safety quality specifications

Various interlocks, such safety fences, auto extinguisher devices, and other safety related equipment may be required. These have to be selected during the configuration of the machine.

① Safety devices include electromagnetic door lock, chuck interlock, hydraulic pressure switch, air pressure switch, short circuit breaker and quill interlock.
(Door interlock and chuck interlock are standard equipment.)

② In the case of automation, various safety fences may be required, such as work stocker safety fences, robot safety fences, etc.

During the configuration of machine specifications, please discuss these requirements with the Nakamura-Tome machine sales representative.

● Precautions on the use of cutting fluids and lubricating oils

Some types of cutting fluids (coolant) are harmful to machine components, causing damages such as peeling of paint, cracking of resin, expansion of rubber, corrosion, and rust build-up on aluminum and copper.

To avoid causing damage to the machine, never use synthetic coolants, or any coolants containing chlorine. In addition, never use coolants and lubricating oils which contain organic solvents such as butane, pentane, hexane, and octane.

Nakamura-Tome

https://www.nakamura-tome.com/

Netsuno 15, Hakusan city, Ishikawa, 920-2195 Japan
Phone : +81 76 273 8100 Fax : +81 76 273 4312
E-mail : nt-jpn@nakamura-tome.co.jp

* This catalog was published in June 2023. Specifications, illustrations and data given herein are subject to change without notice.

* The products in this catalog are controlled by Japan's "Foreign Exchange and Foreign Trade Law". The export of the products is subject to an export license to be issued by the Japanese government.

Cat.0192E00012306N